INSTALLATION INSTRUCTIONS
Aluminum Hi-Side/Super Side Boxes - Models 346 through 396

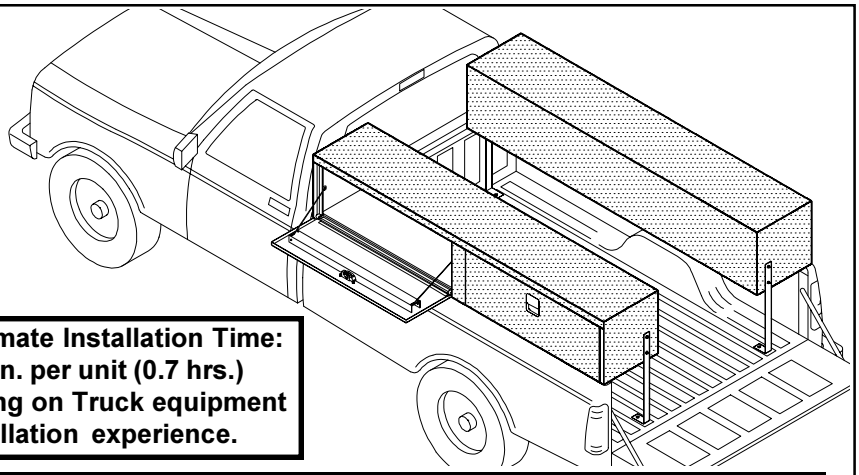

Approximate Installation Time: 42 min. per unit (0.7 hrs.) depending on Truck equipment installation experience.

IMPORTANT BEFORE YOU BEGIN

Read these instructions and warnings completely before installation.

BOLT KIT

Bolt Kit #32-0027 is provided with Models 346 thru 365. Check this bolt kit to be sure the following parts are included:

Quan.	Description
1	1-3/4" Round Cap Plug
8	5/16" Lock Washer
14	5/16" Flat Washer
4	5/16-18 Blind Fastener
1	Installation Tool
1	5/16-18 x 3-1/4" Bolt, black oxide
4	5/16-18 x 1-1/4" Hex Bolt
4	5/16-18 x 1" Hex Bolt
10	5/16-18 Nylon Lock Nut
2	"J" Bolt
2	Plastic Retaining Washer
2	Fender Washer

Bolt Kit #32-0028 is provided with Models 372 thru 396. Check this bolt kit to be sure the following parts are included:

Quan.	Description
1	1-3/4" Round Cap Plug
8	5/16" Lock Washer
14	5/16" Flat Washer
4	5/16-18 Blind Fastener
1	Installation Tool
1	5/16-18 x 2-1/4" Bolt, black oxide
4	5/16-18 x 1-1/4" Hex Bolt
4	5/16-18 x 1" Hex Bolt
12	5/16-18 Nylon Lock Nut
4	"J" Bolt
4	Plastic Retaining Washer
4	Fender Washer

⚠ DANGER

Danger of explosion. Do not use this product for storing or transporting flammables, explosives, hazardous materials, or hazardous waste, such as containers of gasoline, solvents, gun powder, dynamite, propane tanks, acetylene tanks, cutting torches and gas powered equipment. This product is only intended and safe for use in storing and transporting small tools, equipment and other similar materials. Any modifications made to, or unintended use of this product, could create a hazardous condition that can cause death, serious personal injury or property damage.

⚠ WARNING

This product can reduce the driver's ability to clearly see roadways, vehicular or pedestrian traffic and other objects through the rear and side windows of the vehicle, which may cause an accident. Extra precautions should be taken when driving a vehicle with this product. Make all adjustments necessary to ensure maximum visibility, including but not limited to, changing mirror and seating positions. State and local laws may prohibit obstruction of windows in a moving vehicle.

TOOLS REQUIRED

- 1/2" Open or Box End Wrench (2)
- Electric Drill
- 1/2" & 3/8" Drill Bits
- Carpenters Square
- Utitlity Knife or Scissors
- Tape
- 9/16" Open or Box End Wrench

PARTS LIST

- 1 - Hi-Side (or Super Hi-Side) Box
- 2 - Legs
- 2 - Mounting Pads (20" and/or 27" and/or 45")

Rev. G 2/01 Part No. 24-0033

weather guard®
DIVISION OF KNAACK MFG. CO.

13. Stand the box upright and turn the “J” bolts to the side so they won’t interfere when placing the box on the bed of the truck. Set the box in place on the truck bed.

NOTE 2: When placing the box back in position, if it was necessary to drill a stake pocket, that "J" bolt will have to be held on an angle from the underside of the box and guided into the hole in the stake pocket.

14. Fasten the Leg feet to the floor.

15. Turn the “J” bolts so they are under the lip of the bed. Pull the “J” Bolt up until it contacts the lip of the bed. Push the Plastic Retaining Washer down, using the Fender Washer, so the “J” Bolt is held in position. Tighten the Nylon Lock Nut, making sure the “J” Bolt hook remains under the lip of the truck bed.

NOTE: Periodically check the tightness of "J" bolts to insure proper attachment.

INSTALLATION PROCEDURE USING BLIND FASTENERS

⚠ WARNING

Prior to drilling, so as not to cut or puncture fuel tanks, fuel lines, brake lines, electric wires, etc., check under vehicle for locations.

Place a drop of oil on the black oxide bolt before assembling as shown on right. Place the Blind Fastener in the hole and use a 1/2” or 7/16” wrench to tighten black hex bolt until the blind fastener is fully seated. When setting black hex bolt, it will start out hard. As the Blind Fastener “bulbs” out it will get easier, until it bottoms out or sets. Make sure the Blind Fastener and Installation Tool do not turn during installation.

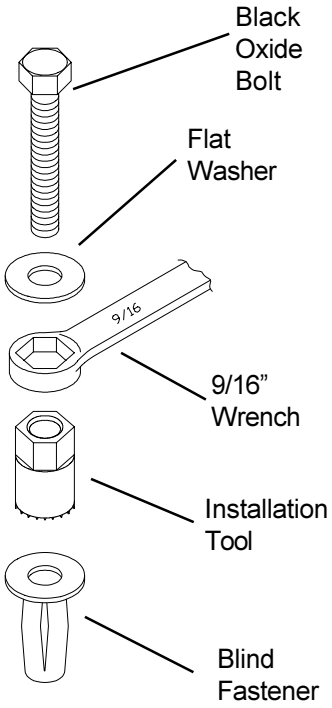

- NOTICE -

Any modification or unintended use of this product shall immediately void all manufacturer’s warranties. Manufacturer disclaims all liability for injuries to persons or property resulting from any modification to, or unintended use of this product.

If you have any questions, please give us a call. **Call Toll Free 1-800-456-7865**

WEATHER GUARD® products are protected by one or more of the following trademarks:
U.S. - 842268, 1661625, 1663369, 2228051; Canada - 282725; U.K. - 1400720; N.Z. - 296049; other trademarks pending.

KNAACK MANUFACTURING COMPANY

KNAACK MANUFACTURING COMPANY
420 E. TERRA COTTA AVENUE - CRYSTAL LAKE, ILLINOIS, USA 60014 - 815-459-6020
©2001 Knaack Manufacturing Company